REVISIONS				
ZONE	REV.	DESCRIPTION	DATE	APPROVED

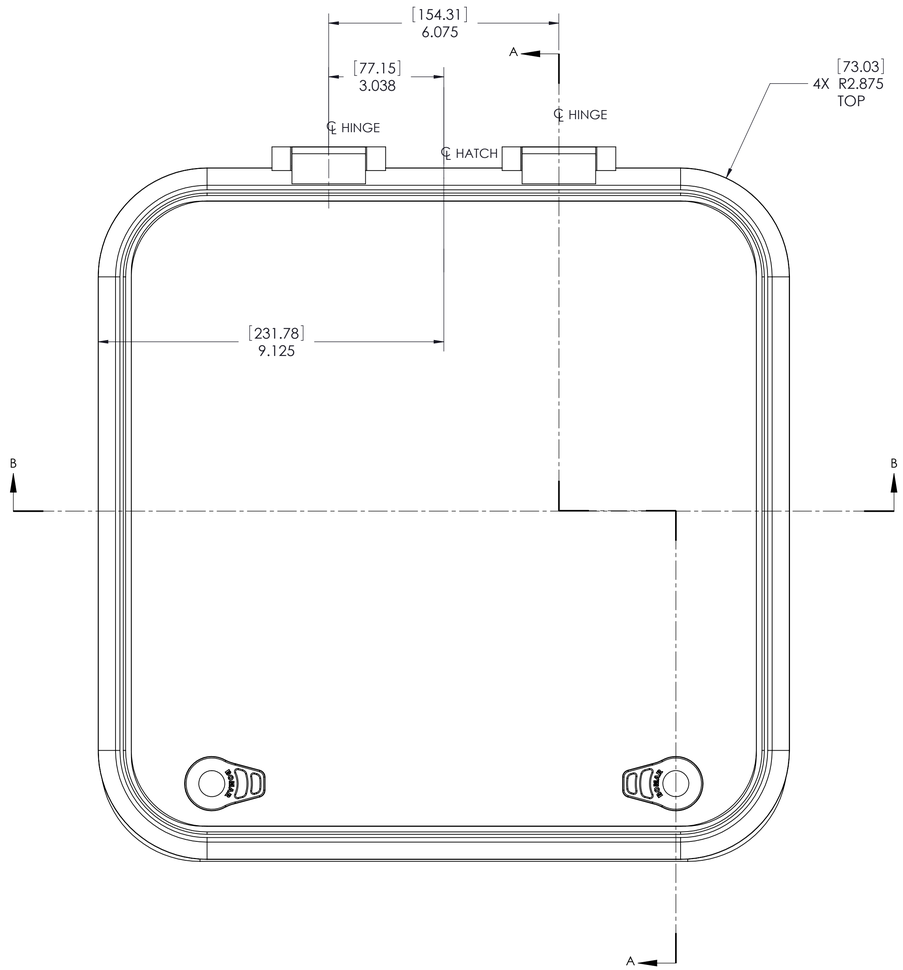

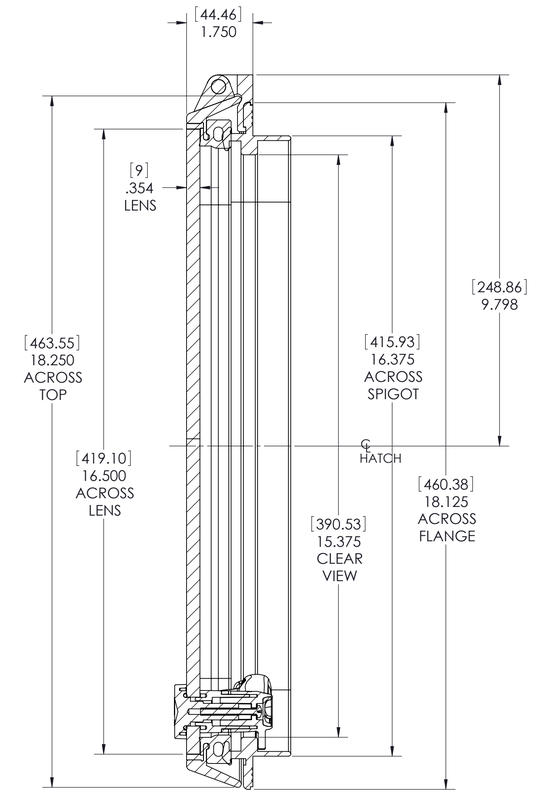

SECTION A-A

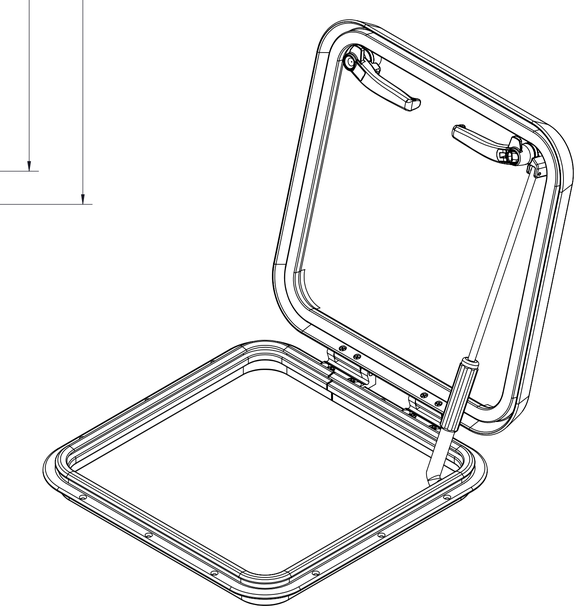

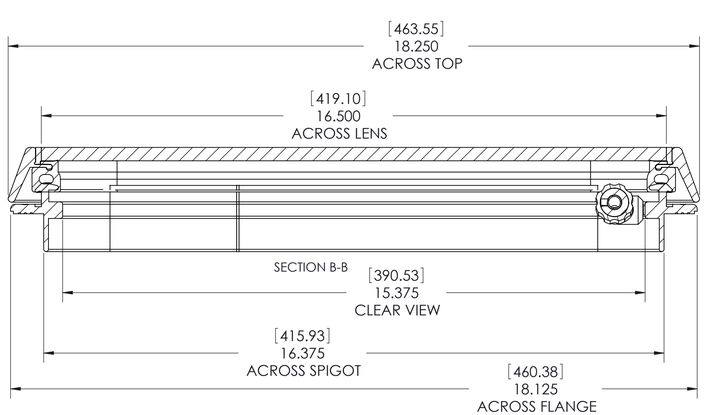

SECTION B-B

NOTE
SUGGESTED CUTOUT 16-1/2 [419.1] X 16-1/2 [419.1]
CUTOUT RADIUS 1-11/16 [42.9]

HATCH OPENS 100°

THIS DRAWING IS THE PROPERTY OF POMPANETTE, LLC., CHARLESTOWN, N.H. AND SHALL NOT BE REPRODUCED OR USED FOR FABRICATION NEW NOT BE COPIED OR DISCLOSED TO OTHERS WITHOUT WRITTEN PERMISSION OF POMPANETTE, LLC.

DIV. OF Pompanette INC.
73 SOUTHWEST ST, PO BOX 1200
CHARLESTOWN, N.H. 03602
PH. (603) 826 5781
FAX (603) 826 3074

DIM. TOL. ±1/64	TITLE: HI PRO HATCH ASSY			
.XXX = ±.005 .XX = ±.01	MATL: SEE BOM		DRAWN BY: JPERRY	1 OF 1
ANG. ±1°	SCALE: 1:2	SIZE: D	DATE: 9/16/08	PART NO.: N2070-10AX

S:\Bomar\Dept-Hatch\2000\HI PRO RECTANGLE GENERIC